AL3/800-3400

Locomotive Antenna

TECHNICAL CERTIFICATE

65 7700-018-62837180-12 PS

LLC “Radiocommunication Laboratory”
Office 802, 33-5, Electrozavodskaya St.,
Moscow, Russia, 107076.
Tel.: +7 (495) 679 8361
Fax.: +7 (495) 679 8362
www.rclab.ru

Table of Contents:

1. Product Overview..... 3
2. Product Applications..... 3
3. Specifications……..... 3
4. Package Content..... 4
5. Design and Function..... 5
6. Safety Precautions..... 5
7. Pre-starting Procedure..... 5
8. Maintenance..... 9
9. Possible Problems and Solutions..... 9
10. Certificate of Acceptance..... 10
11. Certificate of Packaging..... 10
12. Warranties..... 10
13. Reclamation History……..... 11
14. Mounting Drawing..... 12

1. Product Overview

1.1. Locomotive antenna “AL3/800-3400”, TU 65 7700-018-62837180-12.

1.2. Manufacturer:

LLC “Radiocommunication Laboratory”
Office 802, 33-5, Electrozavodskaya St.,
Moscow, Russia, 107076.
Tel.: +7 (495) 679 8361
Fax.: +7 (495) 679 8362
www.rclab.ru

2. Product Applications

2.1. The antenna “AL3/800-3400” is designed to be used for transmitting and receiving of vertically polarized circular pattern radiofrequency signals and also for receiving satellite navigational signals.

2.2. The antenna “AL3/800-3400” is designed to be used for operating in UHF and SHF on rolling stocks in the conjunction with the locomotive radio of GSM-R/GSM900/GSM1800/UMTS/Wi-Fi/WiMAX/LTE.

2.3. The antenna “AL3/800-3400” is designed to be used under the following conditions:

- atmospheric temperature: -50 – +60 °C;
- max. wind velocity: 120 m/s.

3. Specifications

3.1. Antenna type: non-symmetrical vertical sleeve-type vibrator with symmetrical current supply in protective fiberglass radio-transparent radome[1].

3.2. Input impedance: 50 Ohms.

3.3. VSWR (if the antenna is placed at the center of a metal sheet with dimensions 500 mm×500 mm at least and the distance between the antenna and all roof equipment more than 0.6 meters):
800-990, 1350-3200 MHz – ≤ 1.5;
760-800, 990-1350, 3200-3400MHz – ≤2.0.

3.4. Gain (ref. quarter-wavelength vibrator): 0 dB.

3.5. Power input: 100 W.

[1] The antenna corresponds IP66 code requirements.

3.6. Antenna pattern on horizontal plane in operating band: close to circular.
3.7. Overall dimensions: H×L×W – 87×155×90 mm
3.8. Antenna weight: ≤0.64 kg.

4. Package contents

4.1. Basic equipment:

№	Item	ID	Quantities	Notes
1	Antenna in protective radome	TU 65 7700-018-62837180-12	1	
2	Technical Certificate	65 7700-018-62837180-12 PS	1	
3	Packing box	–	1	

4.2. Additional equipment (the delivery and the price are specified at the time of order):

№	Item	ID	Quantities	Notes
1	Package of mounting parts to metal stand	KMAL-1	1	
2	Package of mounting parts to antenna	KMAL-2	1	
3	Coaxial cable for connection to radio	RK 50-7-316 ng(C)-HF (or equivalent); fire hazard class of cables according to GOST R 53315–2009 – PZ.8.1.2.1	#[2]	
4	N-type male connector for cable	N3100-GE08 (or equivalent)	1	
7	Metal stand	ALVR.741134.003	1	

[2] Quantities are specified at the time of order.

5. Design and Function

5.1. The antenna “AL3/800-3400” is the non-symmetrical vertical sleeve-type vibrator with the symmetrical current supply in the protective fiberglass radio-transparent radome (Fig. 1). Structurally the antenna contains the base *1*, the protective radio-transparent radome *2*, the flanged female connector *3* for the connection of the coaxial cable to the radio. The antenna supply is provided by the high-frequency female connector *3*.

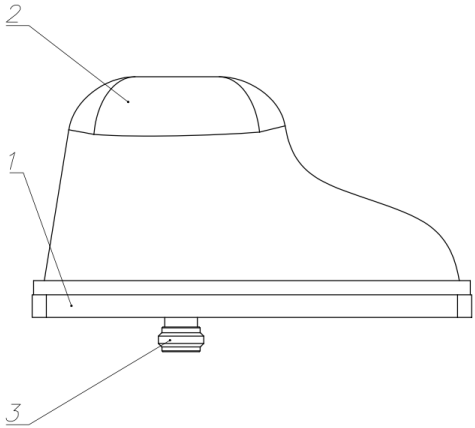

5.2. The input antenna impedance – 50 Ohms. By means of the vertical vibrator’s leg the antenna is grounded to the base *1*, and then to the locomotive’s hull.

6. Safety Precautions

6.1. Only specially trained and familiar with mounting regulations staff can be allowed to antenna mounting.

6.2. Antenna mounting should take place in depots with specially equipped areas.

6.3. During the antenna exploitation in cases of necessity of its examination or other kinds of work <u>no assembly is permitted when the rolling stock is under the overhead contact system.</u>

7. Pre-starting Procedure

7.1. The antenna installation should be in the strict adherence to mounting drawing ALVR.464651.014 MCH (p. 12) and installation recommendations presented in this section.

7.2. <u>Please note!</u> The manufacturer ensures antenna specifications reported in the technical certificate if regulations 7.2.1-7.2.5 are adhered.

7.2.1. The antenna is directly mounted on a plane of the metal roof of the rolling stock.

7.2.2. The distance from the antenna to the roof equipment must be no less than 0.6 meters in all directions (fig. 3a).

7.2.3. The antenna must have the good electrical contact with the metal roof of the locomotive.

7.2.4. It's allowed:

- the antenna installation on the locomotive's roof made of the dielectric material at the center of the preliminary fixed metal sheet with dimensions 500 mm×500 mm at least;
- the antenna installation on the metal stand with dimensions 500 mm×500 mm at least and the height relatively the horizontal surface of the roof of 400 mm at most (fig. 2a);
- the antenna installation on the metal stand welded across the roof on each side with dimensions 200 mm×200 mm at least and the height relatively the horizontal surface of the roof of 40 mm at most (fig. 2b)[3].

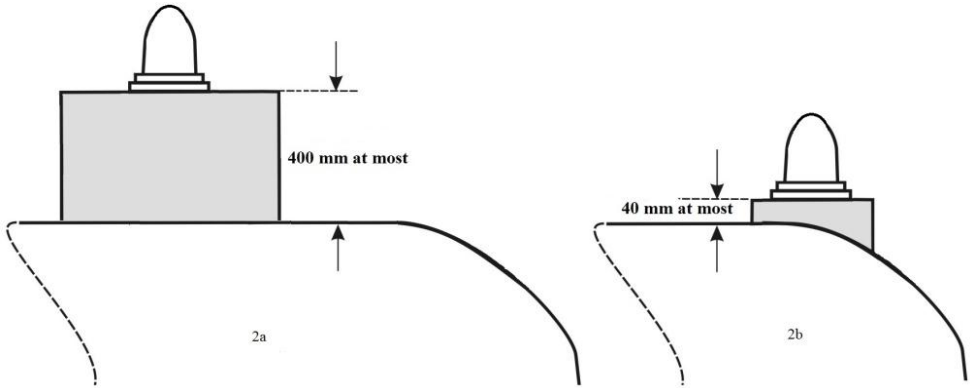

Fig. 2

7.2.5. <u>It is not allowed:</u>

- the antenna installation on the dielectric (non-metallic) surface;
- the antenna installation on not cleaned metal surface covered by paint, jointing compound, glue, etc.;
- the antenna installation in the cross direction or angle wise relatively moving direction (fig. 3b);
- the application of painting and other coatings on the protective fiberglass radio-transparent radome of the antenna.

[3] If the metal stand is welded from 2 or 3 sides minimal dimensions must be increased up to 300 mm×400mm and the connection plug must be hermetically sealed. The stand is made from the metal sheet 5-8 mm thick by an organization mounting the antenna.

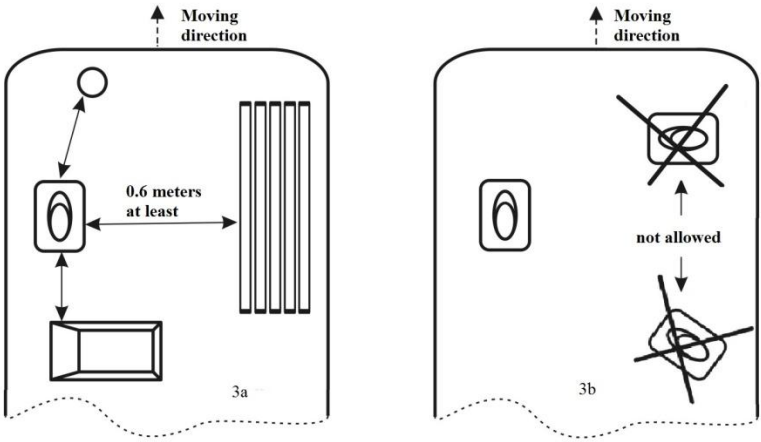

Fig. 3

7.3. Antenna mounting without stand (the main option of mounting).

7.3.1. The antenna is mounted directly on the roof of the locomotive in the longitudinal direction relative to the motion. Clean up the surface of the roof down to the metal over the size of the antenna's base and tin the surface. If the antenna is mounted on the roof made of the aluminum alloy, after cleaning up it from the paint, the place of mounting must be degreased but not be tinned.

7.3.2. Drill four holes around the perimeter with the diameter of 9 mm and one central hole with the diameter of 47 mm for cables with connectors in the selected place of mounting according to ALVR.464651.014 MCH. The edge of the central hole should be processed with the file and then with the sandpaper.

7.3.3. During installing of the antenna on the mounting location it **i**s not allowed:

- contacting of coaxial cables with the edge of the central hole in order to avoid the damage during the operation;
- contacting the protective tube of the antenna for the cable input for the connection to the navigation system with the edge of the central hole in order to avoid the damage during the operation;
- bending cable RK 50-7-316 ng(C)-HF with radius of less than 200 mm;
- bending cable RK 50-3-38 with radius of less than 90 mm.

7.3.4. Pull the cable RK50-7-316 ng(C)-HF (or equivalent) with the connector N3100-GE08 through the central hole and connect them to the connector N864L4-0000 on the antenna. Mount the antenna to the prepared surface

to match fixing holes so that the inclined portion of the radome was directed in the direction of movement. Ensure that connected cables are not tensioned along its entire length.

7.3.5. Fasten antenna's base on the surface using the mounting kit KMAL-2 (available on request) by alternately and evenly tightening the nuts on the perimeter according to assembly drawing ALVR.464651.014 MCH.

7.4. Antenna mounting with optional stand (available on request).

7.4.1. Mounting of the antenna via the stand ALVR.74134.003 is performed by welding along the perimeter to the metal roof of the locomotive (or other surface designed to be mounted) by the technology in accordance with the material of the surface being installed. Pre-mark the hole for the cable and check that the distance between the edge of the front side of the antenna base and the center of the hole is 52 mm. Drill a hole with the diameter 47-50 mm. Install the stand to the roof and align the holes in the roof and the base. Weld the stand to the roof.

7.4.2. Upon the completion of welding remove the scale from the surface of the platform. Pull the cable RK50-7-316 ng(C)-HF (or equivalent) with the connector N3100-GE08 through the central hole and connect them to the connector N864L4-0000 on the antenna.

7.4.3. Mount the antenna on the metal stand so that the holes in the base of the antenna coincide with the mounting studs of the stand and the inclined portion of the radome was oriented in the direction of the movement. Fasten the antenna on the stand with the washers and nuts from the mounting kit KMAL-1 by alternately and evenly tightening the nuts on the perimeter of the base according to assembly drawing ALVR.464651.014 MCH.

7.5. For additional sealing-in, the application of specialized sealants, for example Pentelast ® -1130 (or similar), is possible. The sealant is applied around the base of the antenna and mounting bolts around the head, according to the instructions for use. If sealants of other brands are used, look for the compliance of their physical and chemical properties of the operating conditions of the locomotive antenna.

Please note! If it impossible to adhere with all antenna installation requirements contained in this technical certificate, the antenna installation is performed in agreement with the manufacturer.

8. Maintenance

8.1. The maintenance of the antenna is not required.

8.2. In the case of mechanical damages of the radome the antenna should be replaced.

9. Possible Problems and Solutions

Problems	Possible reason	Solution	Comment
1) When testing the connected radio, the message "Antenna-feeder devices Malfunction" appears	1) Violation of the contact of base of the antenna to the body of the locomotive.	1) Check the installation of the base of the antenna to the hull of the locomotive, when necessary, clean the surface and evenly tighten the nut.	
	2) The integrity of the antenna cable is violated.	2) Check cable integrity and replace if necessary.	
	3) Unreliable connection of cable connectors, a bad connection to the antenna connector.	3) Check the connection of the connectors and terminations.	
If problems occur that are not described in this table, please contact us for consulting with the technical department of LLC "Radiocommunication Laboratory" phone.: +7 (495) 679-83-61, fax: +7 (495) 679-83-62, E-mail: info@rclab.ru			

10. Certificate of Acceptance

The antenna **“AL3/800-3400”** serial number _____ antenna meets specifications TU 65 7700-018-62837180-12 and found fit for use.

Release date _____

Responsible Executive _____

Place

for

stamp

11. Certificate of Packaging

The antenna **“AL3/800-3400”** was packaged by the manufacturer in accordance with requirements of the design documentation.

Packing date _____

Packed by _____

12. Warranties

The manufacturer guarantees the quality of the antenna to requirements of the design documentation and the presented technical certificate if the consumer follows the terms and conditions of storage, transportation, installation and operation.

The warranty period is one year from the date of the shipment of the antenna to the consumer.

13. Reclamation History

The claim to the reclamation is performed according to GOST V15.703-78.

Item, ID	Date of Reclamation	Reclamation Summary	Mark of Allowance of Reclamation	Appointment, Name, Signature of Responsible Executive	Notes
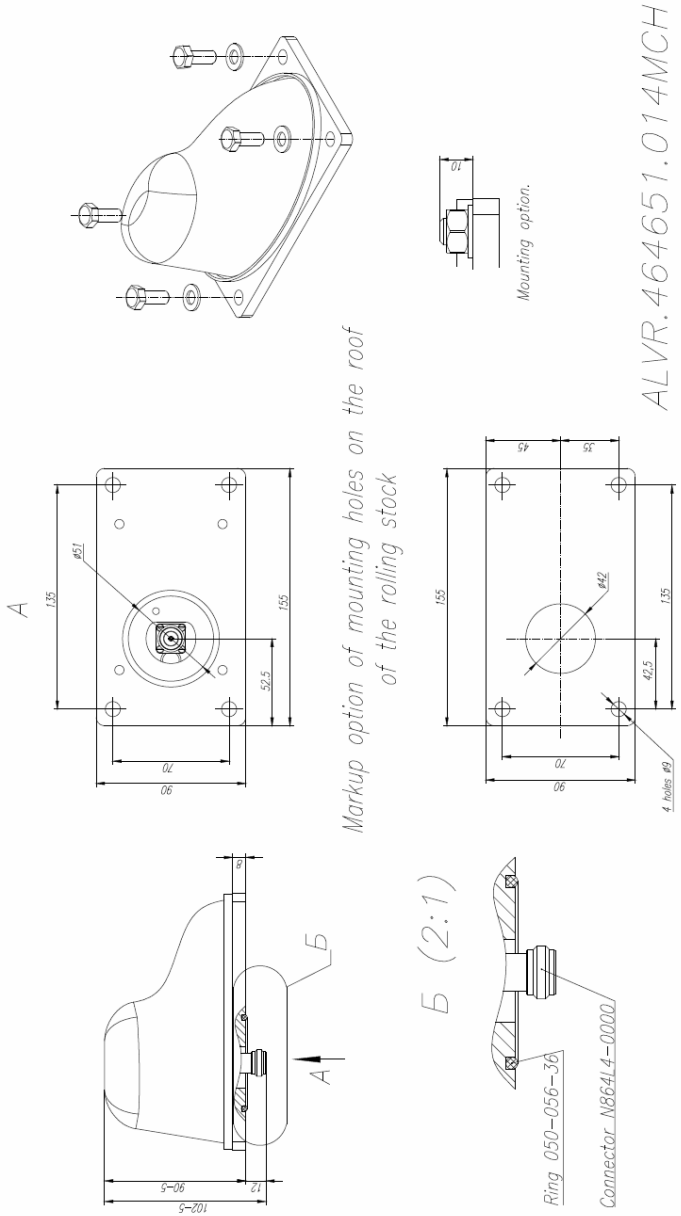
14. Mounting Drawing